Velis Evo



Velis Evo is a compact water heater, boasting an ultra slim design achieved through Ariston's innovative twin tank technology. With its dual 1.5kW power supply*, the unit provides up to 16% more hot water availability compared to an equivalent capacity standard electric water heater.

- / Twin tank design providing 16% more hot water
- / Ultra slim – only 27cm deep
- / "Eco Evo" function
- / Best in class energy rating
- / Anti-legionella and ABS safety system
- / Shower ready alerts on screen
- / 1.5kW dual heating element, ideal for leisure installations
- / Fast re-heat times, shower ready in 50 minutes
- / Premium Italian design
- / Available in 45 and 80 litre models
- / Must be installed with supplied unvented kit

* Only draws max. 1.5kW at any given time

ENERGY RATING

B

M

GOOD DESIGN

kiwa approved product

kiwa approved product

UK CA

*Tank Up To 5 YEARS WARRANTY

*Electrical Up To 2 YEARS WARRANTY

ENERGY EFFICIENT

ABSOLUTE SAFETY SYSTEM

TITANIUM PLUS

TITANIUM PLUS

FLAT

SHOWER READY

ITALIAN DESIGN



Typical applications

- / Mobile homes
- / Glamping pods
- / Cabins

*Warranty Ts & Cs apply

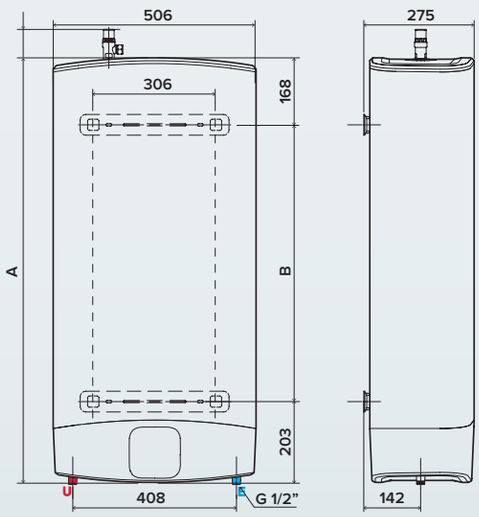

VELIS 45

A = 776mm **B** = 405mm

VELIS 80

A = 1251mm **B** = 880mm

LEGEND

E Cold water inlet G 1/2" **U** Hot water outlet G 1/2"

TECHNICAL DATA	45	80
Description		
Installation	Vertical	Vertical
Actual Capacity (Litres)	45	80
Power (kW)	1.5/1.5	1.5/1.5
Body Colour	Polar White	Polar White
Voltage (V)	220-240	220-240
Frequency (Hz)	50/60	50/60
V40 (l)	77	115
IP Protection	IPX4	IPX4
Max Working Temp (°C)	65	65
Energy rating	B	B
Tapping Profile	M	M
Warranty	5 years	5 years
Aqua Ariston Net Compatibility	No	No
Heating Times (ΔT=45°C)	1h	1h 52m
Standing Losses [kWh/24h] @65°C	0.96	1.32
Product Codes (including unvented kits)	3626305	3626306

ECO EVO - smart function

The innovative **ECO EVO** function memorises user habits to deliver hot water while saving up to 14% on energy bills. The product operates in compliance with top standards on energy efficiency within the electric water heating category.

Up To 14% Energy Savings

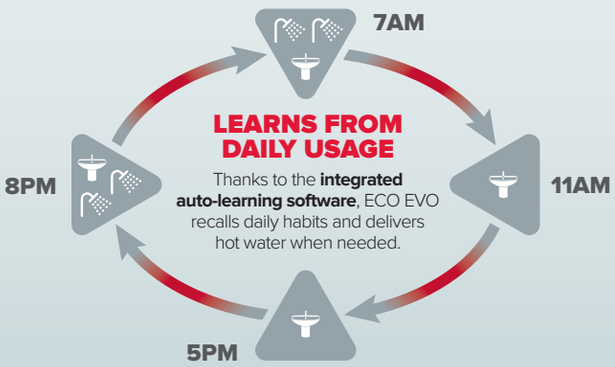

Twin tank technology

Get up to **16% more hot water** with all models in the Velis Evo range, which boasts an innovative, high quality **titanium enamelled twin tank structure** for added durability. **Reduced stratification** with the unique twin tank technology, providing **extra hot water** and a **hot shower in 50 minutes**.

