Velis Evo Wi-Fi



The Velis Evo Wi-Fi offers optional smartphone control, allowing users to plan their next hot shower from wherever they are. With weekly programming through the app, users can save up to 25% on energy bills and monitor consumption anytime.

- / Twin tank design providing 16% more hot water
- / Ultra slim – only 27cm deep
- / "Eco Evo" and "Programming" functions for up to 25% energy savings
- / Optional Wi-Fi compatibility for smartphone control
- / 3kW dual heating element, ideal for domestic installations*
- / Best in class energy rating
- / Anti-legionella and ABS safety system
- / Shower ready notifications in app
- / Shower ready in less than 30 minutes
- / Premium Italian design
- / Available in 45 and 80 litre models
- / Must be installed with supplied unvented kit

* Only draws max. 3kW at any given time

ENERGY RATING

B

M

GOOD DESIGN

kiwa approved product

kiwa approved product

UK CA

*Tank Up To 5 YEARS WARRANTY

*Electrical Up To 2 YEARS WARRANTY

Aqua Ariston NET

ENERGY EFFICIENT

ABSOLUTE SAFETY SYSTEM

TITANIUM PLUS

TITANIUM PLUS

FLAT

SHOWER READY

ITALIAN DESIGN



Velis Evo Wi-Fi has a LED Blue Tech touchscreen display, indicating:

- / Hot water availability
- / Eco Evo function toggle
- / Water temperature and Wi-Fi control
- / Error codes for easy diagnostics

*Warranty Ts & Cs apply

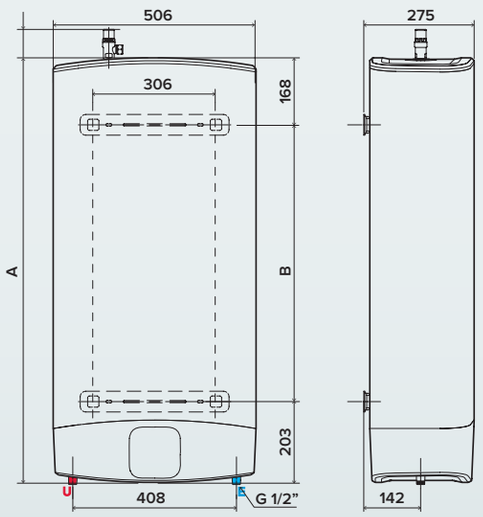

VELIS 45

A = 776mm **B** = 405mm

VELIS 80

A = 1251mm **B** = 880mm

LEGEND

E Cold water inlet G 1/2" **U** Hot water outlet G 1/2"

TECHNICAL DATA	45	80
Description		
Installation	Vertical	Vertical
Actual Capacity (Litres)	45	80
Power (kW)	3/3	3/3
Body Colour	Brushed Metal	Brushed Metal
Voltage (V)	230-240	230-240
Frequency (Hz)	50/60	50/60
V40 (l)	77	115
IP Protection	IPX4	IPX4
Max Working Temp (°C)	65	65
Energy rating	B	B
Tapping Profile	M	M
Warranty	5 years	5 years
Aqua Ariston Net Compatibility	Yes	Yes
Heating Times (ΔT=45°C)	29m	56m
Standing Losses [kWh/24h] @65°C	0.96	1.32
Product Codes (including unvented kits)	3626307	3626308

Aqua Ariston NET

- / Set and manage the water temperature.
- / Receive a real time notification when a shower is ready.
- / Schedule weekly shower needs for all the family.
- / Change working mode (Eco Evo, Programming, etc.)
- / Monitor consumption patterns to save up to 25% on energy bills every year.
- / Check out energy-saving tips for a more responsible and eco-friendly use of the water heater.
- / In case of system failure, get alerts providing an error description of the problem to facilitate technical assistance.



Only 4 steps to connect

1 Download Aqua Ariston NET app

Download on the App Store

GET IT ON Google Play

2 Start wi-fi connection

3 Create an account

4 Sign in to the app and start monitoring your hot water usage