Pro1 Eco S



The Pro1 Eco S is Ariston's electric storage water heater available in 50, 80, and 100 litre capacities. The unit's display allows for easy temperature setting and control.

- / WaterPlus technology for up to 16% more hot water availability *
- / Save up to 14% on energy bills with "Eco Evo" function powered by CoreTech
- / Absolute safety system including anti-legionella function, raising water temperature to 65°C on a monthly basis to eliminate legionella bacteria
- / Precise electronic temperature setting
- / Titanshield technology for optimal tank protection
- / T-MAX function to face unexpected hot water needs
- / Premium insulation material
- / Magnesium anode to fight corrosion
- / Modern shape with "Ariston Wave"
- / Smart intuitive interface
- / Supplied with unvented kit

* Maximum estimated saving based on testing conducted at maximum operating temperature between current and new Ariston products equipped with WaterPlus Technology

ENERGY RATING

B

M

*Tank Up To **5** YEARS WARRANTY

*Electrical Up To **2** YEARS WARRANTY

ECO EVO FUNCTION | ITALIAN DESIGN | DISPLAY ECO | HIGH EFFICIENCY INSULATION | TITAN SHIELD | SHOWER READY | ABSOLUTE SAFETY SYSTEM | WATER PLUS

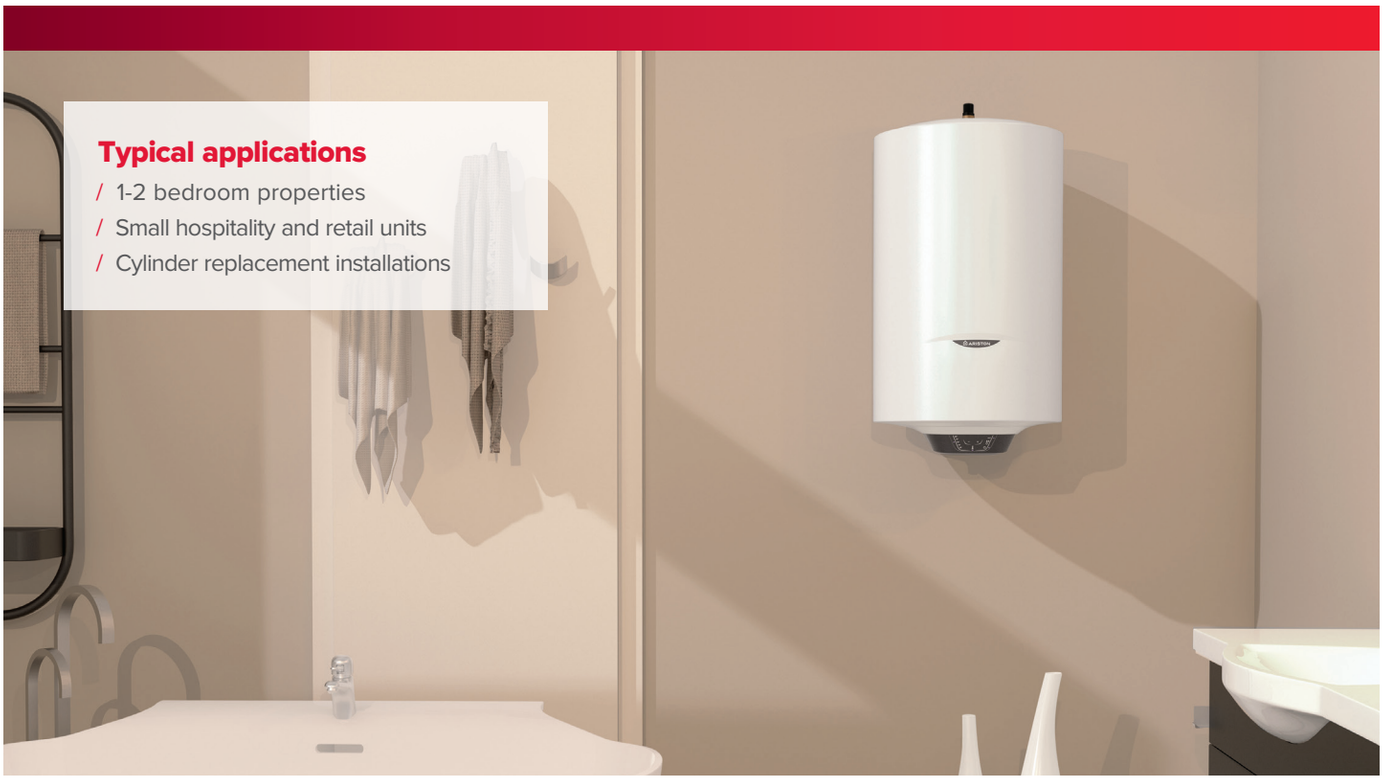

Typical applications

- / 1-2 bedroom properties
- / Small hospitality and retail units
- / Cylinder replacement installations

*Warranty Ts & Cs apply

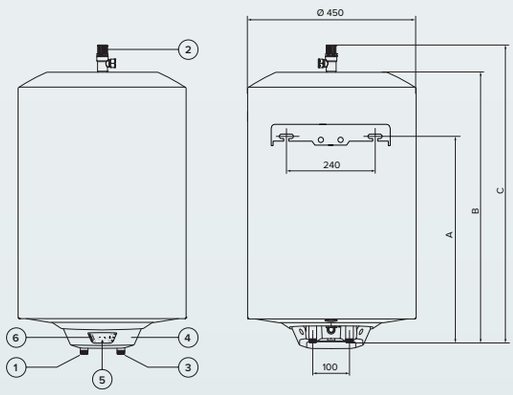

Legend

1 Hot water outlet (1/2 male BSP)
2 Temperature and pressure relief valve
3 Cold water inlet (1/2 male BSP)
4 Control cover
5 Regulation keyboard
6 Heating LED

Model	A	B	C
50	382	549	627
80	587	754	832
100	739	906	984

TECHNICAL DATA	50	80	100
Description			
Installation	Vertical	Vertical	Vertical
Thermostat	Electronic	Electronic	Electronic
Power (kW)	3	3	3
Voltage (V)	230-240	230-240	230-240
Max Working Temperature (°C)	65	65	65
Heat-Up Time (ΔT 45°C) (mins)	60	97	128
Heat Dispersion At 65°C (kWh/24h)	0.92	1.25	1.43
V40 (Litres)	65	92	130
IP Protection	IPX3	IPX3	IPX3
Energy Rating	B	B	B
Energy Rating Tapping Profile	M	M	M
Weight When Empty (kg)	18	24	29
Weight When Full (kg)	67	99	124
Heat Loss (kWh/24h)	0.917	1.253	1.434
Maximum Inlet Pressure (Rated Pressure) (bar)	12	12	12
Maximum Design Pressure (bar)	6	6	6
Set Operating Pressure Expansion Valve (bar)	6	6	6
Pre-charge Pressure Of The Expansion Vessel (bar)	3.5	3.5	3.5
Set Opening T&P Relief Valve (bar)	7	7	7
Capacity (Litres)	49	75	95
Product Codes (including unvented kits)	4015328	4015329	4015330

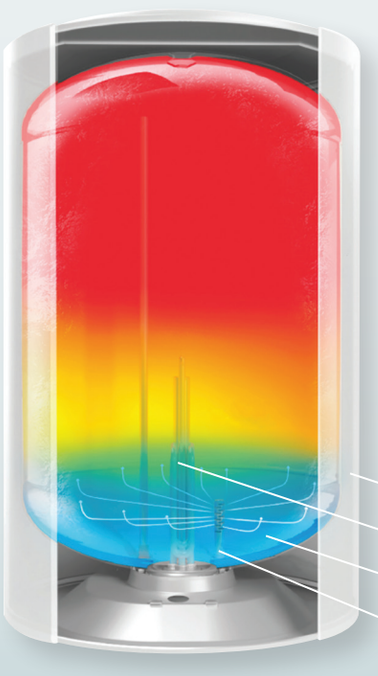

Waterplus technology

Ariston's groundbreaking WaterPlus technology keeps the incoming cold water at the bottom of the tank, reducing the mix with stored hot water.

Up to 16% more hot water available.