Andris R



The Andris R is an unvented electric storage water heater and part of Ariston's market-leading Andris range. This easy to install unit offers impressive hot water performance and fast reheat times. It is available in 10 or 15 litre variants with a choice of 2kW or 3kW outputs.

- / 'E' setting on the dial to optimise comfort and energy saving
- / Copper heating element (Nickel free)
- / Simple and intuitive dial control
- / Installation in 10 easy steps
- / Compact Italian design
- / Version with cable available (3100865 & 3100866)
- / Fast reheat times from just 12 mins (10L, 3kW model)

ENERGY RATING

B

XXS

kiwa approved product

UK CA

* 3 YEARS WARRANTY

ITALIAN DESIGN

ANTI-CORROSION

TITANIUM PLUS

TITANIUM PLUS

EXTERNAL POWER REGULATION

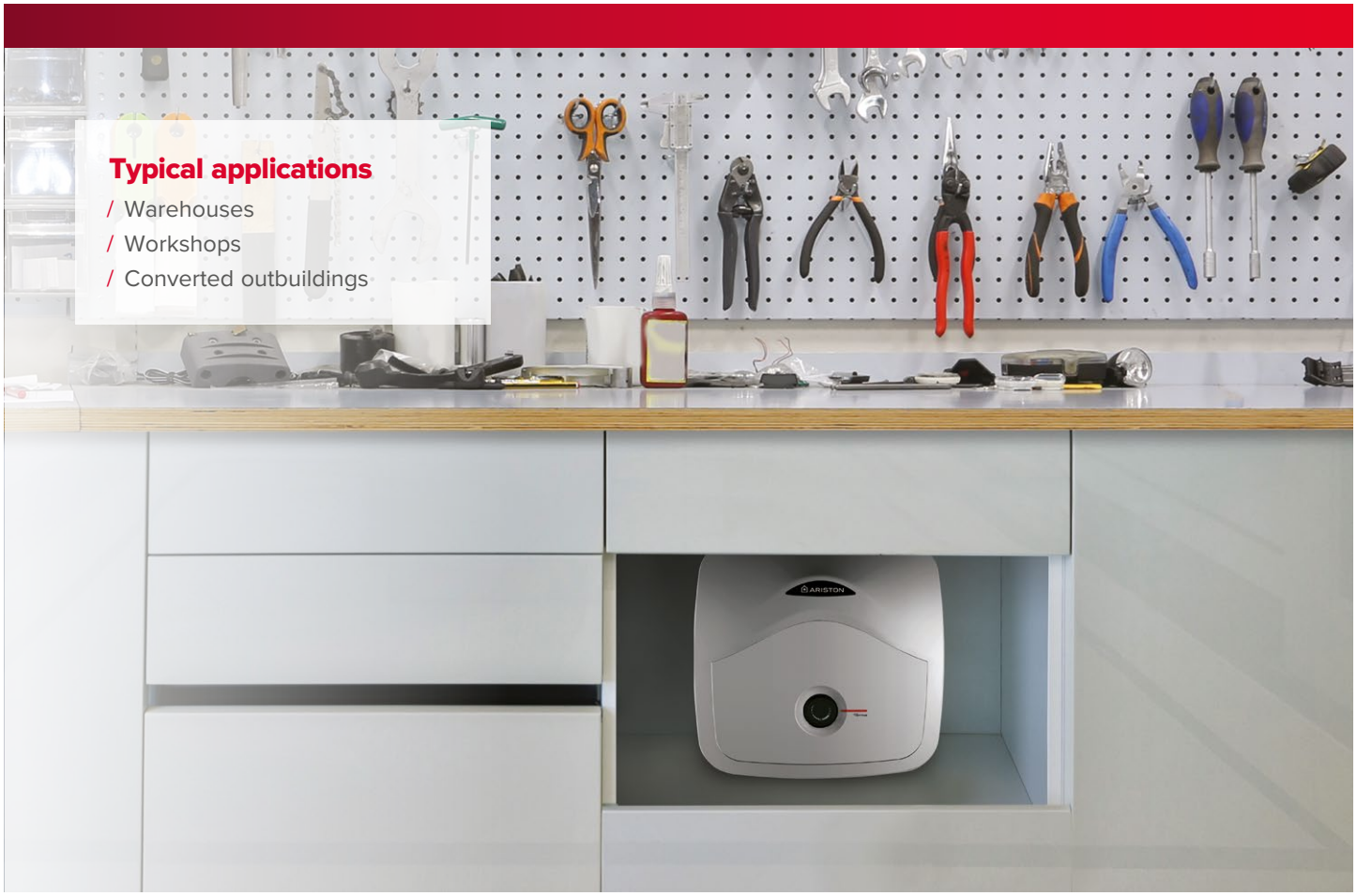

Typical applications

- / Warehouses
- / Workshops
- / Converted outbuildings

*Warranty Ts & Cs apply

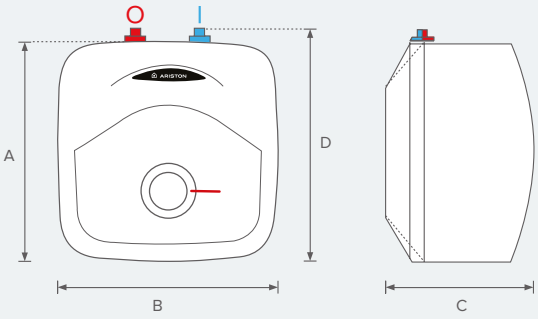

	10L (Undersink) 2kW & 3kW	15L (Undersink) 2kW & 3kW
A	360mm	360mm
B	360mm	360mm
C	298mm	346mm
D	385mm	385mm

TECHNICAL DATA	10 UR	10 UR	15 UR	15 UR
Description	**2kW**	**3kW**	**2kW**	**3kW**
Type	Unvented	Unvented	Unvented	Unvented
Capacity (Litres)	10	10	15	15
Installation	Undersink	Undersink	Undersink	Undersink
Energy rating	B	B	B	B
Element Rating (kW)	2	3	2	3
Tapping Profile	XXS	XXS	XXS	XXS
Heating Time (min)	17	12	26	18
Unit Weight (kg)	6.7	6.7	7.5	7.5
Heat Loss 65°C (kWh)	0.71	0.71	0.85	0.85
Product Codes	3100863	3100832	3100864	3100834
Andris R with cable				
Product Codes	3100865	-	3100866	-

In order to fit an ariston Andris R it is good practice and sometimes mandatory to install one or several of the following kits:



KIT A
Expansion Vessel & Non-return Valve

An expansion vessel is a device that takes up the expansion of water in the domestic hot water system when it is heated. This prevents build up of excess pressure. The non-return valve prevents backflow of expanded hot water in to the cold water main.

Product Code: 406801



KIT B
3.5 Bar Pressure Reducing Valve

The maximum cold water inlet pressure designed for the Andris R unit is 3.5 bar therefore this pressure reducing valve controls the water to not exceed this limit.

Product Code: 406802



KIT C
Discharge Tundish

In the event that the hot water system over pressurises, the highly pressurised water is discharged via the 6 bar pressure relief valve and the tundish serves to visually indicate that this discharge is occuring.

Product Code: 406807