Clas System One



The lightweight Clas System One comes complete with an 8 year warranty and a range of high-end features including a large backlit display, an energy saving 'Auto' function.

- / **XtraTech**™ stainless steel heat exchanger
- / 'Auto' function technology
- / Comfort function
- / High efficiency pump
- / 1:7 modulation
- / Quiet operation starting at 49dB
- / Lightweight unit starting at 29kg
- / 8 year warranty
- / 'A' energy rating for optimum efficiency
- / Large backlit display
- / Includes LPG conversion kit
- / Ariston NET compatible

ENERGY RATING

A

*Up To 8 YEARS WARRANTY

kiwa approved product

UK WATER SUPPLY REGULATIONS

XtraTech™
stainless-steel heat exchanger

PERFORMANCE CERTIFIED BY TÜV RHEINLAND GROUP

TÜVRheinland CERTIFIED

www.tuv.com
ID 0000056520

ARISTON NET COMPATIBLE | VOICE CONTROL | SUPER SILENT | EASY TO USE | ITALIAN DESIGN | BUS BridgeNet® SYSTEM MANAGEMENT | AUTO FUNCTION | EASY INSTALLATION | EASY MAINTENANCE



*Warranty Ts & Cs apply

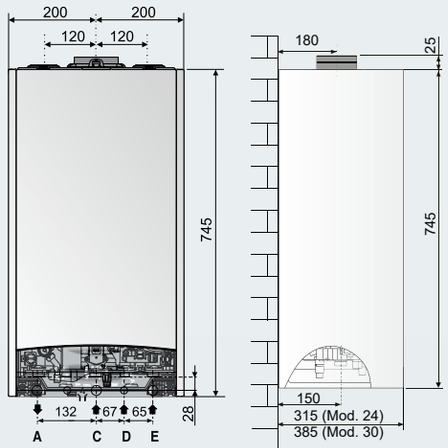

*Distance from back of boiler to front of clock

KEY

A \ Central heating flow
B \ Domestic hot water outlet
C \ Gas inlet
D \ Domestic hot water inlet
E \ Central heating return

Coaxial flue

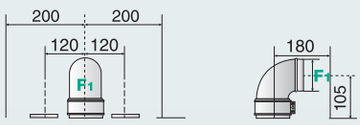

Maximum smoke / air development:
Ø60/100: till a 8 m (24 kW) - 7 m (30 kW) - 7 m (35 kW)
Ø80/125: till a 33 m (24 kW) - 24 m (30 kW) - 27 m (35 kW)

Twin flue configurations also possible

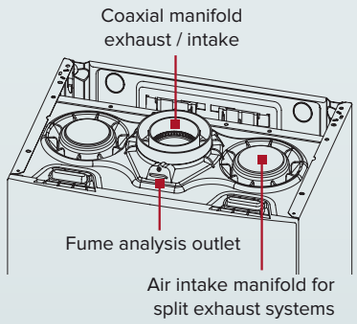

Hydraulic scheme

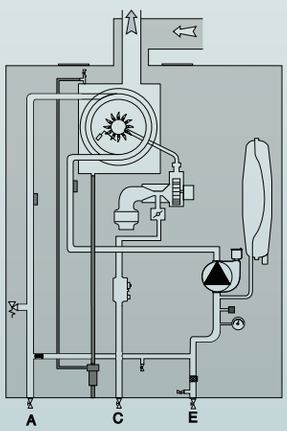

Please see installation manual for full details

TECHNICAL DATA		18	24	30
Efficiency				
Energy rating - heating/DHW	Rating	A	A	A
Energy rating data - seasonal space heating efficiency	%	94	94	94
Energy rating data - water heating efficiency	%	-	-	-
Energy rating data - noise level	dB	51	49	51
Energy rating data - tapping profile	-	-	-	-
SEDBUK rating	Band	A	A	A
SAP efficiency 2005	%	90.2	90.1	90.3
SAP efficiency 2009/2012	%	89.4	89.5	89.5
Power & Performance				
DHW flow rate ΔT @ 35°C	l/min	-	-	-
Heat output max (CH)	kW	18	22	28
Heat output max (DHW)	kW	-	-	-
Min/Max heating temperature (high temp. range)	°C	35/82	35/82	35/82
Min/Max heating temperature (low temp. range)	°C	20/45	20/45	20/45
DHW temperature min/max	°C	-	-	-
Characteristics				
Minimum ambient temperature	°C	5	5	5
DHW minimum flow rate	l/min	-	-	-
DHW pressure - min/max	bar	-	-	-
Built-in expansion vessel capacity	l	8	8	8
Servicing clearances - top/front/bottom	mm	300/450/250	300/450/250	300/450/250
Servicing clearances - left/right	mm	5/5	5/5	5/5
Weight	kg	28.5	28.5	31.1
NOx	mg/kWh	57	53	51
Electrical Data				
Electrical supply	V/Hz	230/50	230/50	230/50
Protection grade of electrical system	IP	X5D	X5D	X5D
Product Codes		3301046	3301047	3301048

Home gets smarter, life gets simpler

Enjoy Ariston NET connectivity

Comfort at your fingertips with the Ariston NET app

Download on the App Store
GET IT ON Google Play

