Clas One



The lightweight Clas One comes complete with an 8 year warranty and a range of high-end features including a large backlit display, an energy saving 'Auto' function.

- / **XtraTech**™ stainless steel heat exchanger
- / High domestic hot water flow rates
- / 'Auto' function technology
- / Comfort function
- / High efficiency pump
- / 1:7 modulation
- / Quiet operation starting at 49dB
- / Lightweight unit starting at 29kg
- / 8 year warranty
- / 'A' energy rating for optimum efficiency
- / Large backlit display
- / Includes LPG conversion kit
- / Ariston NET compatible

ENERGY RATING

A

A

*Up To 8 YEARS WARRANTY

kiwa approved product

UK WATER SUPPLY REGULATIONS

XtraTech™
stainless-steel heat exchanger

PERFORMANCE CERTIFIED BY TÜV RHEINLAND GROUP

TÜVRheinland CERTIFIED

www.tuv.com
ID 0000056520

ARISTON NET COMPATIBLE | SUPER SILENT | EASY TO USE | ITALIAN DESIGN | SYSTEM MANAGEMENT | AUTO FUNCTION | EASY INSTALLATION | EASY MAINTENANCE



*Warranty Ts & Cs apply

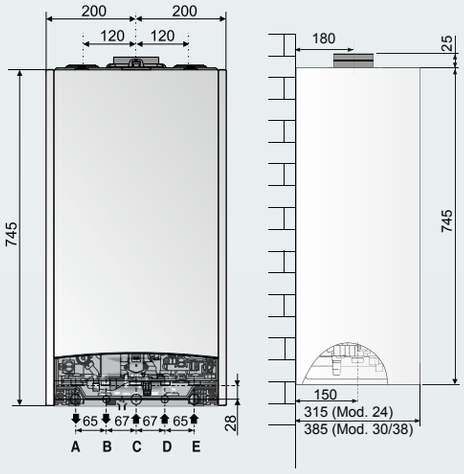

*Distance from back of boiler to front of clock

LEGEND

A \ Central heating flow
B \ Domestic hot water outlet
C \ Gas Inlet
D \ Domestic cold water inlet
E \ Central heating return

Version - Coaxial exhaust

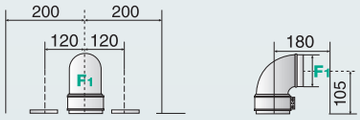

Maximum flue gas/air generation:
Ø60/100: up to 8 m (24 kW) - 7 m (30 kW) - 6 m (35 kW)
Ø80/125: up to 21 m (24 kW) - 20 m (30 kW) - 24 m (35 kW)

Versions - Split exhaust

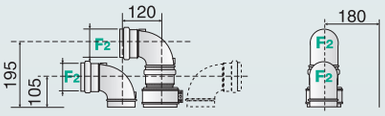

Maximum flue gas/air generation:
Ø80/80: up to 60 m (24-30 kW) - 45 m (35 kW)
Ø60/60: up to 16 m (24 kW) - 12 m (30 kW) - 14 m (35 kW)

TECHNICAL DATA		24	30	38
Efficiency				
Energy rating - heating/DHW	Rating	A/A	A/A	A/A
Energy rating data - seasonal space heating efficiency	%	94	94	94
Energy rating data - water heating efficiency	%	83	82	85
Energy rating data - noise level	dB	49	51	52
Energy rating data - tapping profile	-	XL	XL	XXL
SEDBUK rating	Band	A	A	A
SAP efficiency 2005	%	90	90.2	90
SAP efficiency 2009/2012	%	89.4	89.4	89.4
Power & Performance				
DHW flow rate ΔT @ 35°C	l/min	10.4	12.5	15.5
Heat output max (CH)	kW	22	28	31
Heat output max (DHW)	kW	26	30	38
Min/Max heating temperature (high temp. range)	°C	35/82	35/82	35/82
Min/Max heating temperature (low temp. range)	°C	20/45	20/45	20/45
DHW temperature min/max	°C	36/60	36/60	36/60
Characteristics				
Minimum ambient temperature	°C	5	5	5
DHW minimum flow rate	l/min	2	2	2
DHW pressure - min/max	bar	0.2/7.0	0.2/7.0	0.2/7.0
Built-in expansion vessel capacity	l	8	8	8
Servicing clearances - top/front/bottom	mm	300/450/250	300/450/250	300/450/250
Servicing clearances - left/right	mm	50/50	50/50	50/50
Weight	kg	29.7	32.3	33.4
NOx	mg/kWh	53	51	55
Electrical Data				
Electrical supply	V/Hz	230/50	230/50	230/50
Protection grade of electrical system	IP	X5D	X5D	X5D
Product Codes		3301043	3301044	3301045

FLUE CONFIGURATIONS

Type 1

Coaxial Systems 60/100

Horizontal installation with no plume kit.

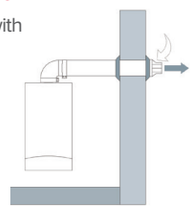

Product code:
3318073
Horizontal Coaxial Kit

Type 2

Coaxial Systems 60/100

Horizontal installation with coaxial piping and a plume kit.

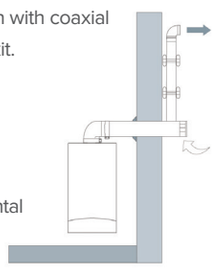

Product code:
3318329
Plume Kit
(inc. 1000mm Horizontal Terminal)

Type 3

Coaxial Systems 60/100

Vertical installation with coaxial piping on a pitched roof.

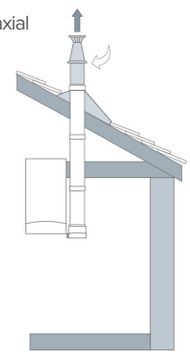

Product code:
3318079
Vertical Starter

3318080
Vertical Flue

3318077
Coaxial Extension - 1000mm

3318009
Black Flexible Flashing Base Cap 12 – 40°

3318010
Red Flexible Flashing Base Cap 12 – 40°